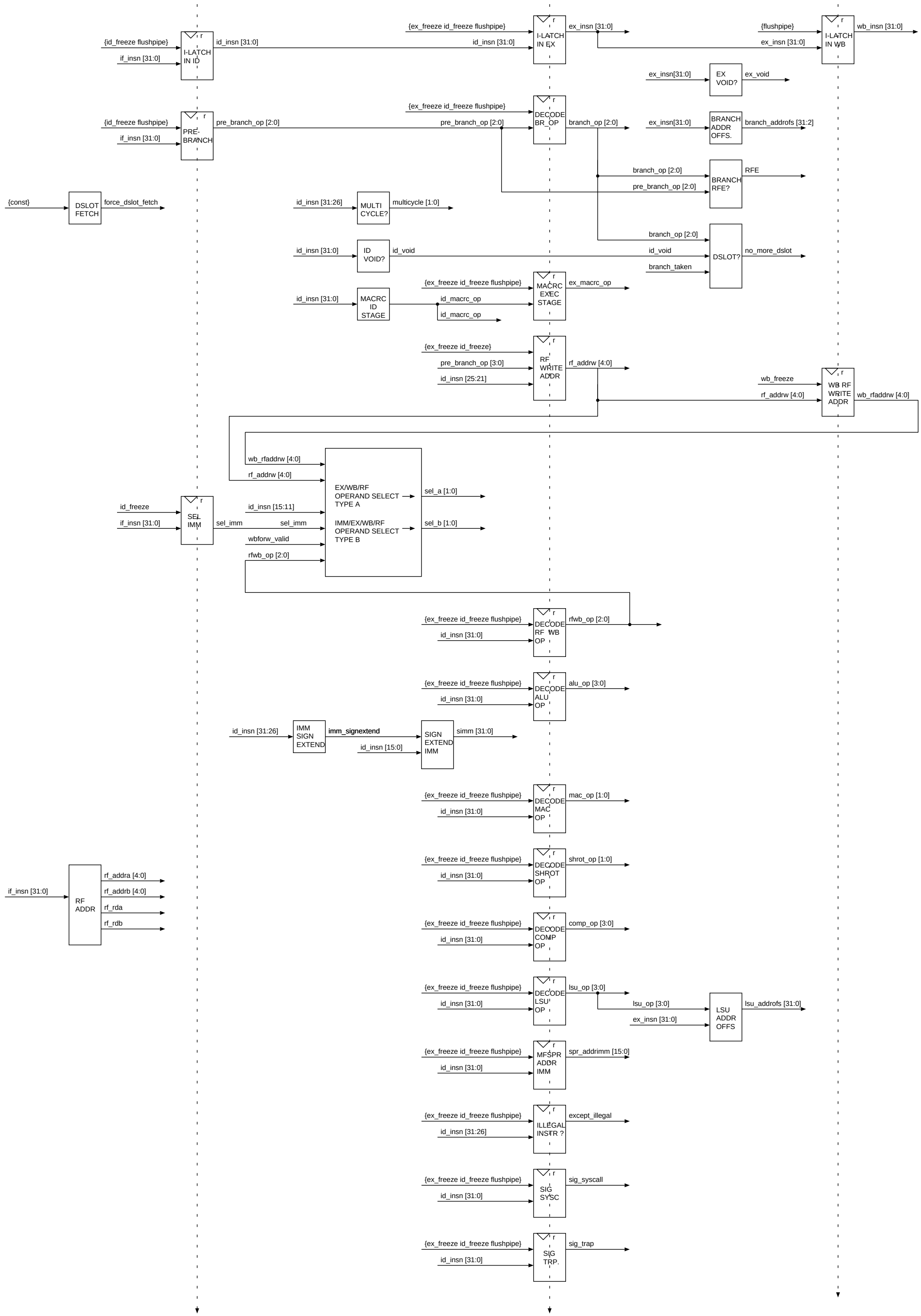
I-LATCH IN ID
{id_freeze flushpipe}
if_insn [31:0]
id_insn [31:0]
I-LATCH IN EX
{ex_freeze id_freeze flushpipe}
ex_insn [31:0]
I-LATCH IN WB
{flushpipe}
wb_insn [31:0]
EX VOID?
ex_insn[31:0]
ex_void
PRE-BRANCH
pre_branch_op [2:0]
DECODE BR_OP
branch_op [2:0]
BRANCH ADDR OFFS.
branch_addrofs [31:2]
BRANCH RFE?
RFE
DSLOT FETCH
{const}
force_dslot_fetch
MULTI CYCLE?
multicycle [1:0]
ID VOID?
id_void
DSLOT?
no_more_dslot
branch_taken
MACRC EXEC STAGE
ex_macrc_op
MACRC ID STAGE
id_macrc_op
RF WRITE ADDR
rf_addrw [4:0]
pre_branch_op [3:0]
id_insn [25:21]
WB RF WRITE ADDR
wb_freeze
wb_rfaddrw [4:0]
EX/WB/RF OPERAND SELECT TYPE A
IMM/EX/WB/RF OPERAND SELECT TYPE B
sel_a [1:0]
sel_b [1:0]
SEL IMM
sel_imm
wbforw_valid
rfwb_op [2:0]
DECODE RF WB OP
DECODE ALU OP
alu_op [3:0]
IMM SIGN EXTEND
imm_signextend
SIGN EXTEND IMM
simm [31:0]
DECODE MAC OP
mac_op [1:0]
RF ADDR
rf_addra [4:0]
rf_addrb [4:0]
rf_rda
rf_rdb
DECODE SHROT OP
shrot_op [1:0]
DECODE COMP OP
comp_op [3:0]
DECODE LSU OP
lsu_op [3:0]
LSU ADDR OFFS
lsu_addrofs [31:0]
MFSPR ADDR IMM
spr_addrimm [15:0]
ILLEGAL INSTR ?
except_illegal
SIG SYSC
sig_syscall
SIG TRP.
sig_trap