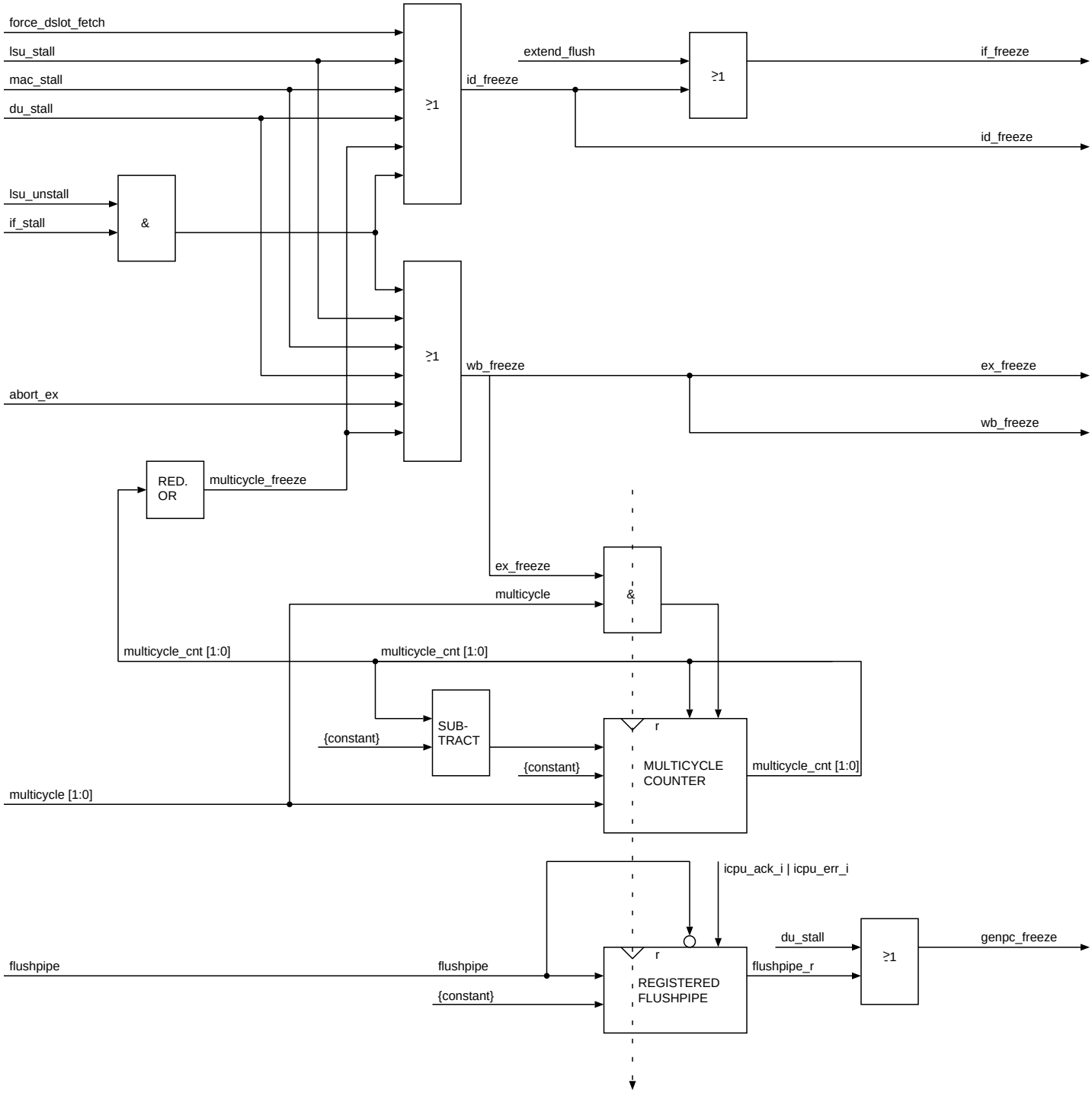
force_dslot_fetch
lsu_stall
mac_stall
du_stall
lsu_unstall
if_stall
&
≥1
id_freeze
extend_flush
≥1
if_freeze
id_freeze
≥1
wb_freeze
ex_freeze
wb_freeze
abort_ex
RED.
OR
multicycle_freeze
ex_freeze
multicycle
&
multicycle_cnt [1:0]
multicycle_cnt [1:0]
SUB-
TRACT
{constant}
r
MULTICYCLE
COUNTER
{constant}
multicycle_cnt [1:0]
multicycle [1:0]
icpu_ack_i | icpu_err_i
du_stall
≥1
genpc_freeze
flushpipe
flushpipe
r
REGISTERED
FLUSHPIPE
flushpipe_r
{constant}